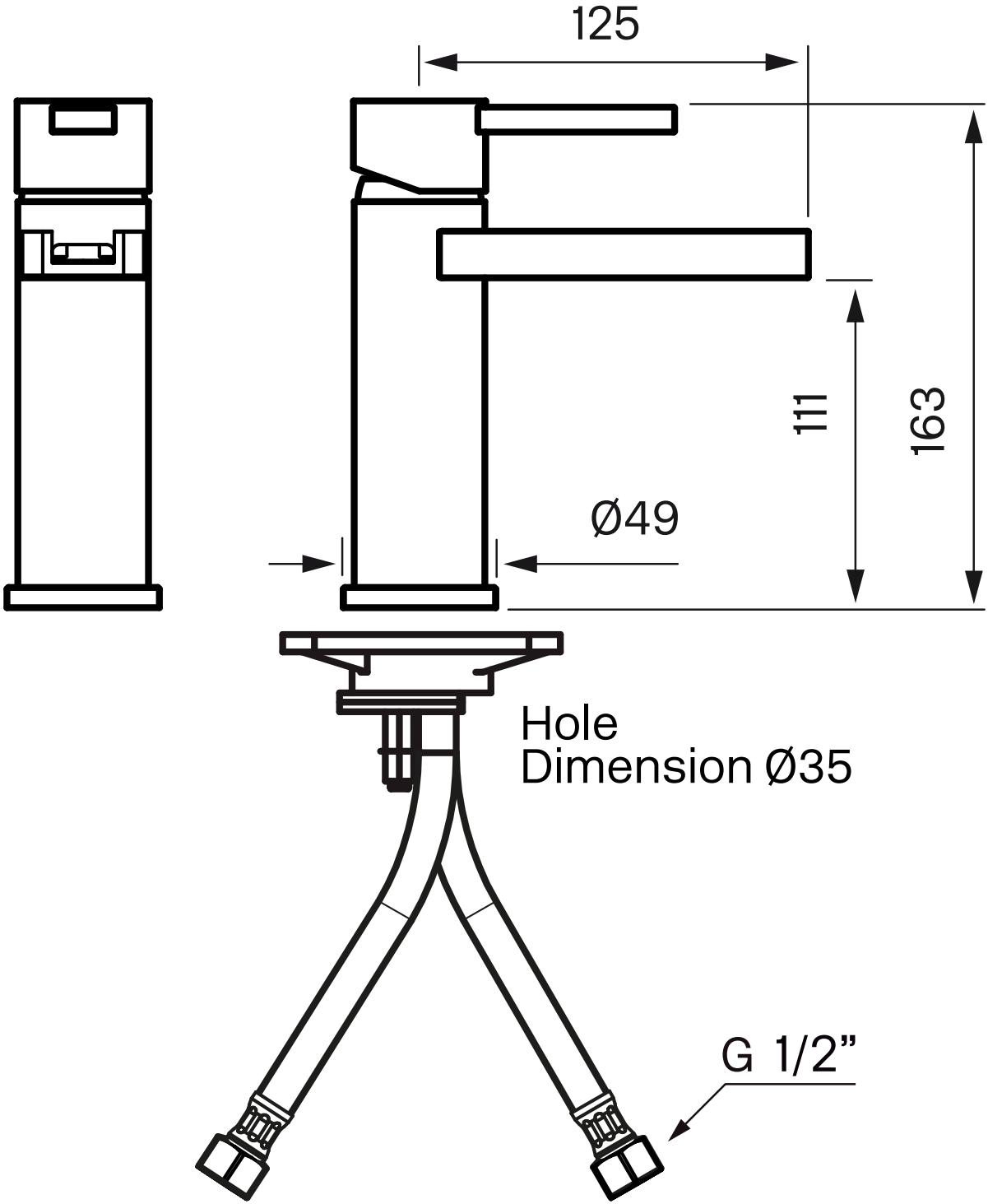
125
111
163
Ø49
Hole
Dimension Ø35
G 1/2”