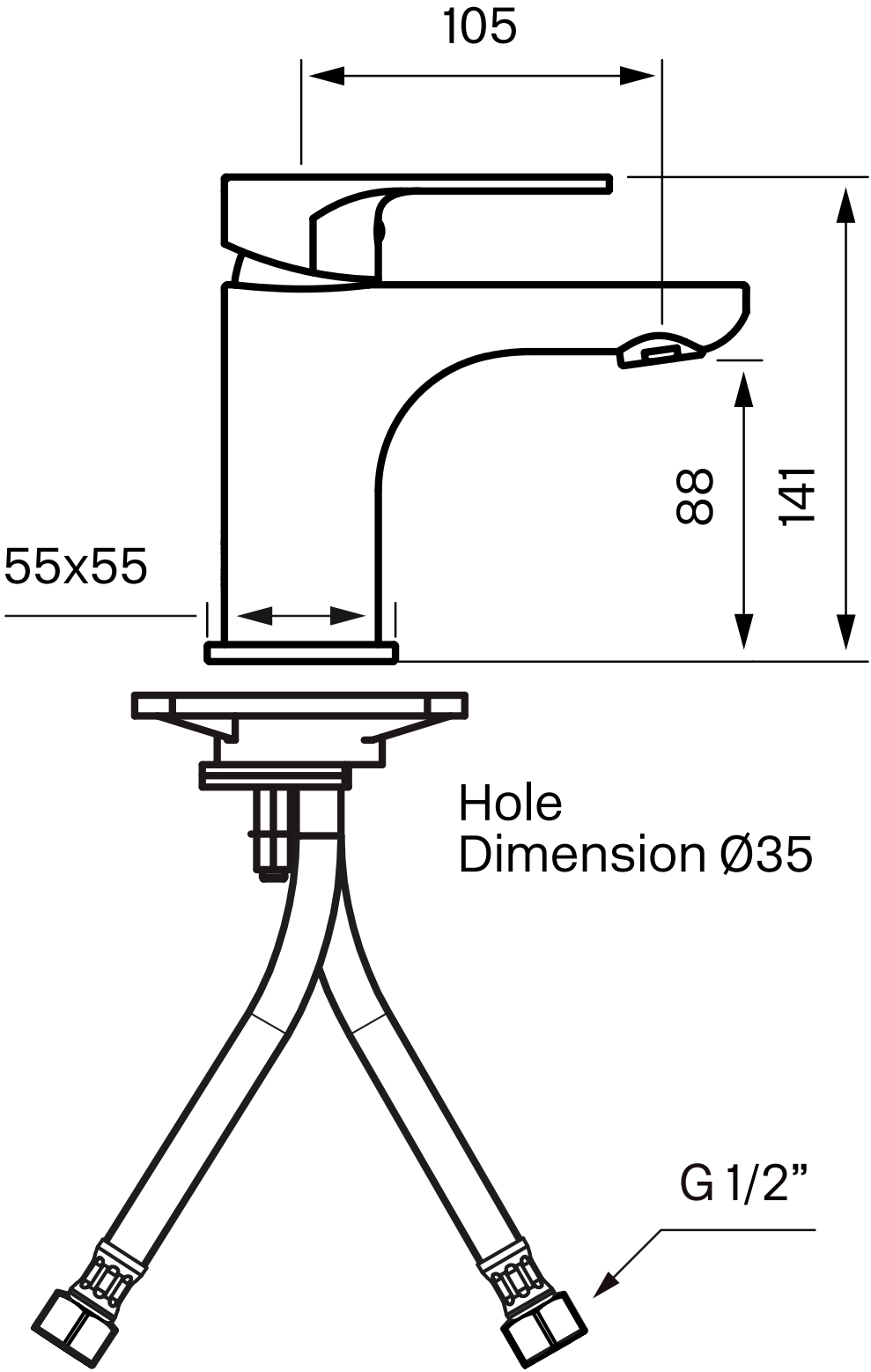
105
88
141
55x55
Hole
Dimension Ø35
G 1/2”