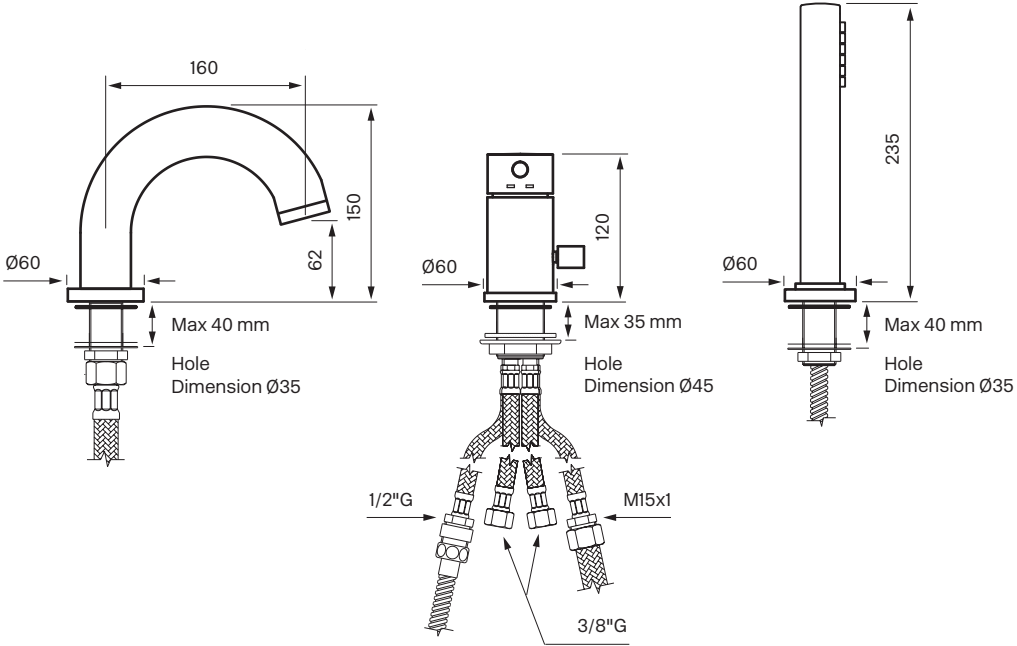
160
150
62
Ø60
Max 40 mm
Hole
Dimension Ø35
120
Ø60
Max 35 mm
Hole
Dimension Ø45
1/2"G
M15x1
3/8"G
235
Ø60
Max 40 mm
Hole
Dimension Ø35